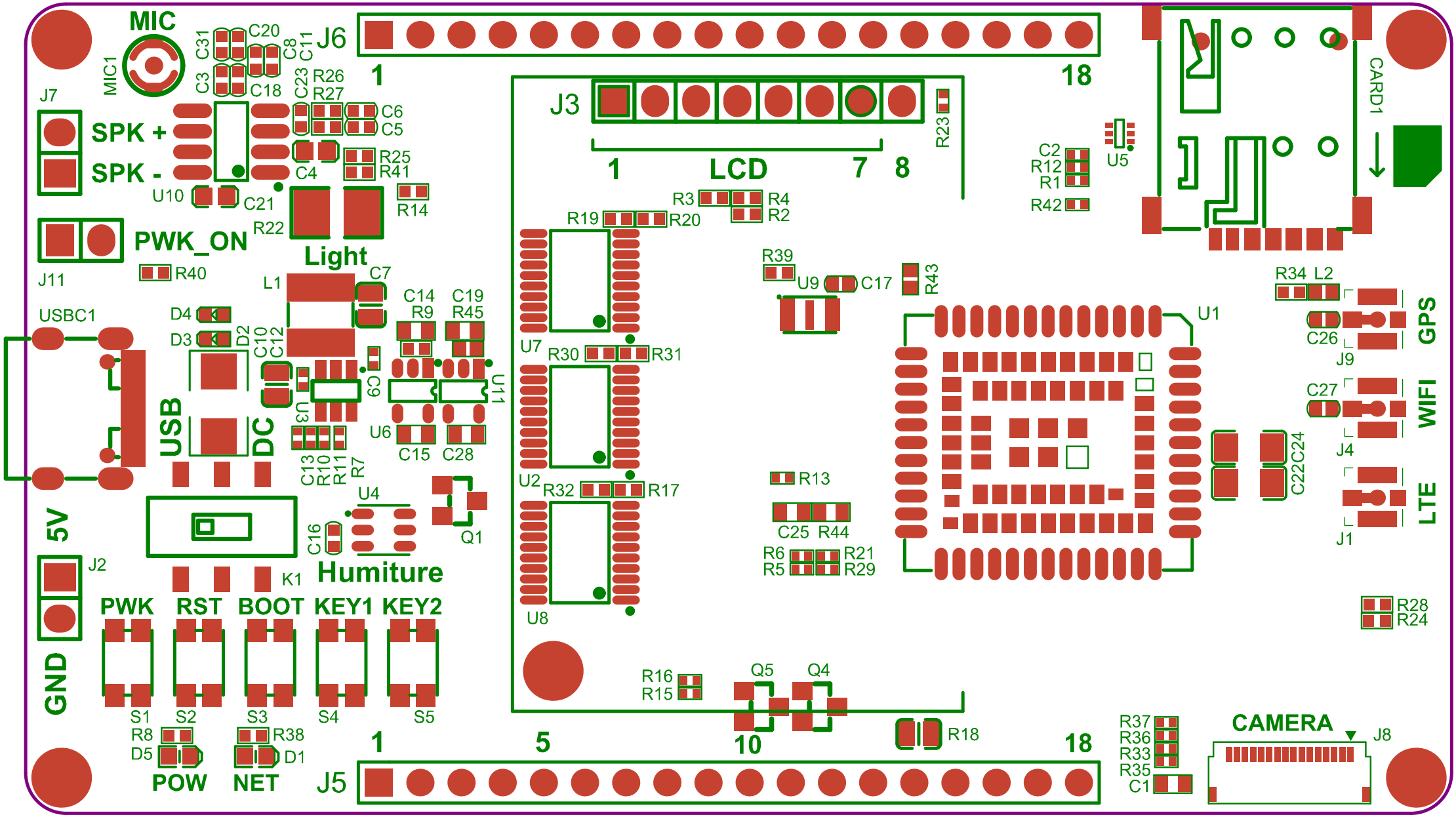
MIC
MIC1
C31
C20
C8
C11
J6
1
18
C3
C18
C23
R26
R27
J7
SPK +
SPK -
C6
C5
C4
R25
R41
U10
C21
R14
R22
PWK_ON
J11
R40
Light
L1
C7
C14
R9
C19
R45
USBC1
D4
D3
D2
C10
C12
C9
U11
U3
U6
C15
C28
USB
DC
C13
R10
R11
R7
U4
Q1
5V
J2
C16
K1
Humiture
GND
PWK
RST
BOOT
KEY1
KEY2
S1
S2
S3
S4
S5
R8
D5
R38
D1
POW
NET
J5
1
5
10
18
J3
LCD
1
7
8
R23
R3
R4
R2
R19
R20
U7
R30
R31
U2
R32
R17
U8
R39
U9
C17
R43
R13
C25
R44
R6
R5
R21
R29
R16
R15
Q5
Q4
R18
U1
C2
R12
R1
R42
U5
CARD1
R34
L2
C26
J9
GPS
C27
J4
WIFI
C22
C24
J1
LTE
R28
R24
R37
R36
R33
R35
C1
CAMERA
J8